CIDETRAK®
Mating Disruption Kit
Carrier Pack Instructions
For: OFM-L and CM

CARRIER PACKAGE ASSEMBLY

1. Open CIDETRAK® 4-pack by tearing the zipper around the carrier package to completely separate the two carrier packs.
2. Lift top pack to separate two 2-packs.
3. Turn right side up and tear open foil dispenser pack at notch. Insert strap into each end-slot and secure.

CIDETRAK® dispenser in use

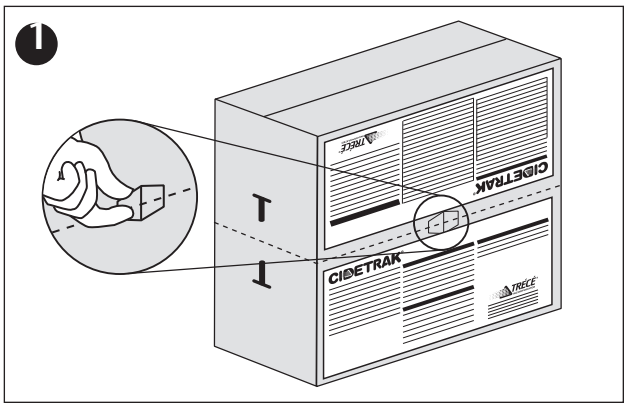

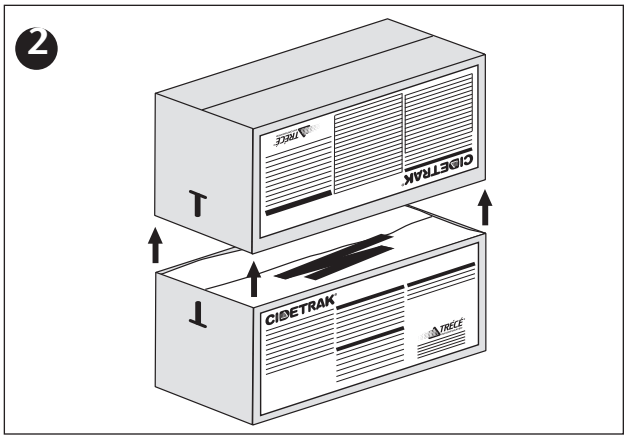

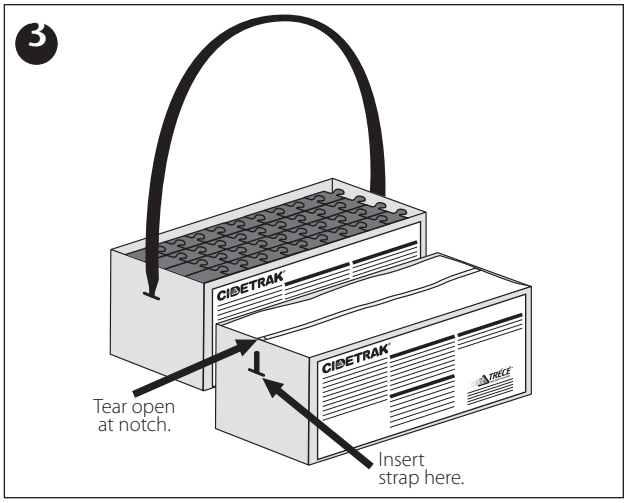

Fruitful Growing Seasons Start with

CIDETRAK®

Visit our website: www.trece.com or call 1-866-785-1313

© 2007 TRECE, Adair, OK USA
TRECE and CIDETRAK are registered trademarks of Tréce, Inc., Adair, OK USA

TRÉCE® INCORPORATED
INSECT PHEROMONE & KAIROMONE SYSTEMS

Your Edge – And Ours – Is Knowledge.